Latching E-Stop





40mm Knurled Mushroom Head Latching E-Stop
Page 2



35mm Knurled Mushroom Head Latching E-Stop
Page 3



Mushroom Head Key Lock Latching E-Stop
Page 4



Illuminated 40mm Knurled Mushroom Head Latching E-Stop
Page 5



Illuminated 35mm Knurled Mushroom Head Latching E-Stop
Page 6

Latching E-Stop - PBS113

- cURus Certified
- Full Assembly for Full Customization
- Lens Color Options: Red
- Button Styles: Latching E-Stop
- 22mm Mounting Hole for Panels



PBS113GP22R-01

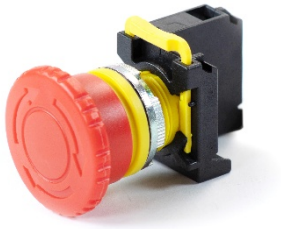

PBS113GM22R-01

		PBS113GP22R-01	PBS113GM22R-01
Rating	Thermal Current Ith	10A 50/60HZ	
	Isolation Voltage	Ui 600V	
	Enclosed Thermal Current Ith	10A	
	Short Circuit Current	1000A	
	AC-15	120V 6A, 240V 3A	
	AC-12	480V 1.5A, 600V 1.2A	
	DC-12	120V 2.2A, 240V 0.6A, 480V 0.4A	
	Ambient Temperature	-4˚F - 140˚F (-20˚C - 60˚C)	
	Contact Resistance	50mΩ Max (Initial)	
	IP Rating	IP65	
	Certifications	CE, cURus*	
Mechanical	Button Type	Latching E-Stop	
	Contacts	1x Normally Closed*	
	Mounting Hole	22mm	
	Actuator Lifespan	1 Million Operations	
	Contact Block Lifespan	1 Million Operations	
Physical	Button Head Color	Red	
	Button Style	40mm Knurled Mushroom Head	
	Border Material	Plastic	Plastic
	Ring Material	Plastic	Metal
Notes	* One additional contact can be added to pre-assembly * Additional contacts can be purchased separately * UL recognized component. Component recognized for use in UL Listed equipment *Specifications subject to change without notice.*		

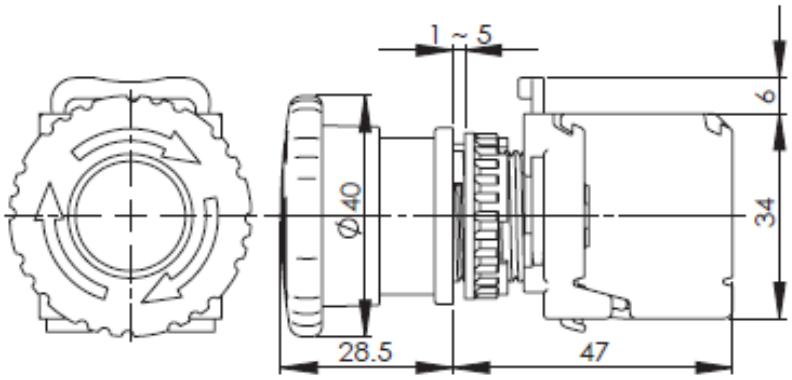

Latching E-Stop - PBS113

- cURus Certified
- Full Assembly for Full Customization
- Lens Color Options: Red
- Button Styles: Latching E-Stop
- 22mm Mounting Hole for Panels



PBS113FP22R-01



PBS113FM22R-01

		PBS113FP22R-01	PBS113FM22R-01
Rating	Thermal Current Ith	10A 50/60HZ	
	Isolation Voltage	Ui 600V	
	Enclosed Thermal Current Ith	10A	
	Short Circuit Current	1000A	
	AC-15	120V 6A, 240V 3A	
	AC-12	480V 1.5A, 600V 1.2A	
	DC-12	120V 2.2A, 240V 0.6A, 480V 0.4A	
	Ambient Temperature	-4˚F - 140˚F (-20˚C - 60˚C)	
	Contact Resistance	50mΩ Max (Initial)	
	IP Rating	IP65	
	Certifications	CE, cURus*	
Mechanical	Button Type	Latching E-Stop	
	Contacts	1x Normally Closed*	
	Mounting Hole	22mm	
	Actuator Lifespan	1 Million Operations	
	Contact Block Lifespan	1 Million Operations	
Physical	Button Head Color	Red	
	Button Style	35mm Knurled Mushroom Head	
	Border Material	Plastic	Plastic
	Ring Material	Plastic	Metal
Notes	* One additional contact can be added to pre-assembly * Additional contacts can be purchased separately * UL recognized component. Component recognized for use in UL Listed equipment *Specifications subject to change without notice.*		

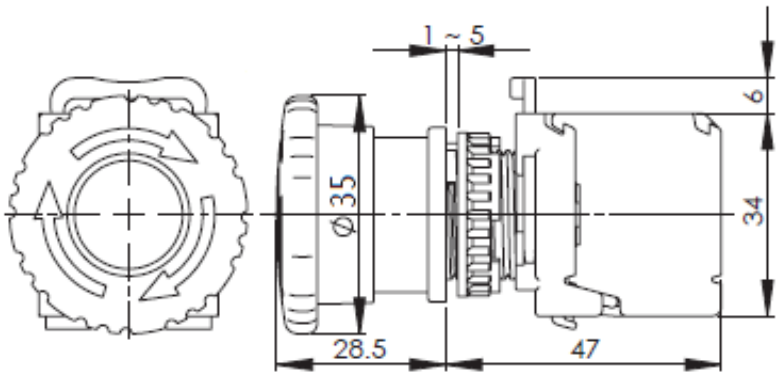

Latching E-Stop - PBS113

- cURus Certified
- Full Assembly for Full Customization
- Lens Color Options: Red
- Button Styles: Latching E-Stop
- 22mm Mounting Hole for Panels



PBS113LP22R-01



PBS113LM22R-01

		PBS113LP22R-01	PBS113LM22R-01
Rating	Thermal Current Ith	10A 50/60HZ	
	Isolation Voltage	Ui 600V	
	Enclosed Thermal Current Ith	10A	
	Short Circuit Current	1000A	
	AC-15	120V 6A, 240V 3A	
	AC-12	480V 1.5A, 600V 1.2A	
	DC-12	120V 2.2A, 240V 0.6A, 480V 0.4A	
	Ambient Temperature	-4˚F - 140˚F (-20˚C - 60˚C)	
	Contact Resistance	50mΩ Max (Initial)	
	IP Rating	IP65	
	Certifications	CE, cURus*	
Mechanical	Button Type	Latching E-Stop w/Key Lock	
	Contacts	1x Normally Closed*	
	Mounting Hole	22mm	
	Actuator Lifespan	1 Million Operations	
	Contact Block Lifespan	1 Million Operations	
Physical	Button Head Color	Red	
	Button Style	Mushroom Key Lock	
	Border Material	Plastic	Plastic
	Ring Material	Plastic	Metal
Notes	* One additional contact can be added to pre-assembly * Additional contacts can be purchased separately * UL recognized component. Component recognized for use in UL Listed equipment *Specifications subject to change without notice.*		

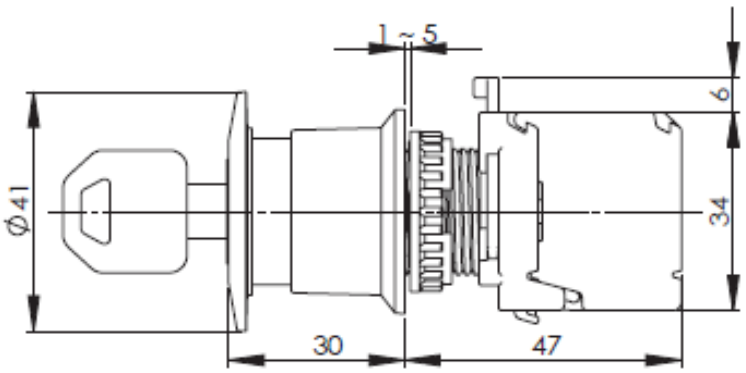

Latching E-Stop - PBS113

- cURus Certified
- Full Assembly for Full Customization
- Lens Color Options: Red
- Button Styles: Latching E-Stop
- 22mm Mounting Hole for Panels
- Lamp Holder Included with each Illuminated Button



PBS113KP22R-01L2



PBS113KM22R-01L2

		PBS113KP22R-01L2	PBS113KM22R-01L2
Rating	Thermal Current Ith	10A 50/60HZ	
	Isolation Voltage	Ui 600V	
	Enclosed Thermal Current Ith	10A	
	Short Circuit Current	1000A	
	AC-15	120V 6A, 240V 3A	
	AC-12	480V 1.5A, 600V 1.2A	
	DC-12	120V 2.2A, 240V 0.6A, 480V 0.4A	
	Ambient Temperature	-4˚F - 140˚F (-20˚C - 60˚C)	
	Contact Resistance	50mΩ Max (Initial)	
	IP Rating	IP65	
	Certifications	CE, cURus*	
Mechanical	Button Type	Latching E-Stop	
	Contacts	1x Normally Closed*	
	Mounting Hole	22mm	
	Actuator Lifespan	1 Million Operations	
	Contact Block Lifespan	1 Million Operations	
Physical	Button Head Color	Red	
	Button Style	40mm Knurled Mushroom Head	
	Bulb Type	LED	
	Lamp Voltage	24V	
	Border Material	Plastic	Plastic
	Ring Material	Plastic	Metal
Notes	* One additional contact can be added to pre-assembly * Additional contacts can be purchased separately * UL recognized component. Component recognized for use in UL Listed equipment *Specifications subject to change without notice.*		

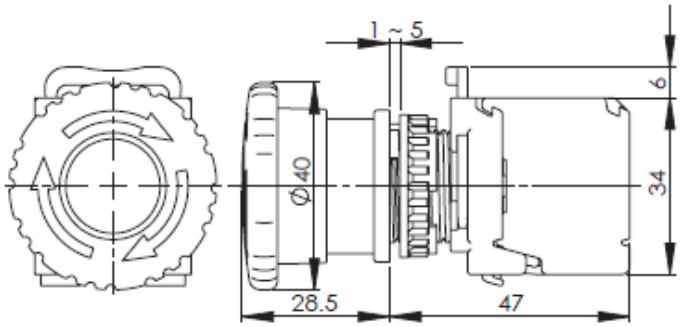

Latching E-Stop - PBS113

- cURus Certified
- Full Assembly for Full Customization
- Lens Color Options: Red
- Button Styles: Latching E-Stop
- 22mm Mounting Hole for Panels
- Lamp Holder Included with each Illuminated Button



PBS113JP22R-01L2



PBS113JM22R-01L2

		PBS113JP22R-01L2	PBS113JM22R-01L2
Rating	Thermal Current Ith	10A 50/60HZ	
	Isolation Voltage	Ui 600V	
	Enclosed Thermal Current Ith	10A	
	Short Circuit Current	1000A	
	AC-15	120V 6A, 240V 3A	
	AC-12	480V 1.5A, 600V 1.2A	
	DC-12	120V 2.2A, 240V 0.6A, 480V 0.4A	
	Ambient Temperature	-4˚F - 140˚F (-20˚C - 60˚C)	
	Contact Resistance	50mΩ Max (Initial)	
	IP Rating	IP65	
	Certifications	CE, cURus*	
Mechanical	Button Type	Latching E-Stop	
	Contacts	1x Normally Closed*	
	Mounting Hole	22mm	
	Actuator Lifespan	1 Million Operations	
	Contact Block Lifespan	1 Million Operations	
Physical	Button Head Color	Red	
	Button Style	35mm Knurled Mushroom Head	
	Bulb Type	LED	
	Lamp Voltage	24V	
	Border Material	Plastic	Plastic
	Ring Material	Plastic	Metal
Notes	* One additional contact can be added to pre-assembly * Additional contacts can be purchased separately * UL recognized component. Component recognized for use in UL Listed equipment *Specifications subject to change without notice.*		

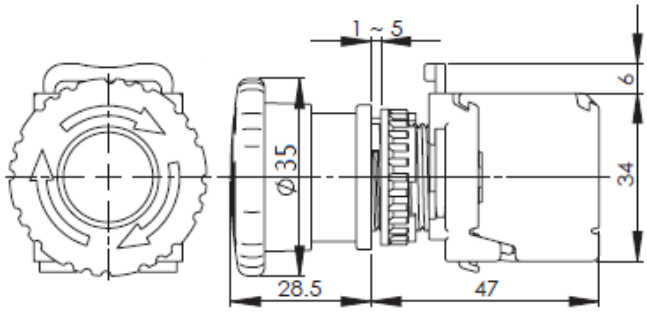

Control Cabinet Essentials

Companies Trust Maple Systems

In today's world, a control cabinet is recognized as the central nervous system of modern industrial and infrastructure systems. Beyond a simple metal enclosure, this sophisticated hub integrates power distribution, automation logic, and real-time communication. Cabinets serve as the "brain" of automated operations, where signals from thousands of field sensors are received, processed by high-performance controllers, and translated into precise physical actions.

Tower Stack Lights

Machine Status | Safety Alerts | Alarms

Tower stack lights / Signal Towers provide high-visibility visual and audible signaling for clear machine status indication, safety alerts, and efficient industrial communication. Multiple color configurations, flash patterns, and buzzer functions to match specific operational needs. Energy-efficient LED technology delivers superior brightness, long lifespan, and reliable performance in demanding environments. Pre-wired and pre-assembled designs reduce installation time, while a wide range of sizes, mounting options, and technologies make these signal towers ideal for virtually any industrial application, including Andon Station systems for real-time production status and operator notifications.

Pushbuttons & Selector Switches

Indicator | Momentary | Latching

Industrial pushbuttons and push button switches from Maple Systems offer dependable control over electrical and automation systems. Choose from momentary and maintained action options with illuminated, selector, **emergency stop** and toggle designs. Ideal for panel mounting, PCB and enclosure use, these switches feature common contact arrangements and sealed protection with good tactile feedback for dependable operation in demanding environments. Frequently used in manufacturing, transportation, energy, medical and commercial applications, push button switches are well suited for frequent operation and harsh conditions.

Network Switches

Unmanaged | Lite-Managed | Managed

Maple Systems industrial ethernet network switches are built with industrial grade components, tested in-house, and certified for reliable operation in harsh environmental conditions. Our network switches provide a high level of immunity against EMI and EMS found in industrial environments; and include features such as ESD Protection, Surge Protection, and Short Circuit Protection to ensure continuous operation in unstable power conditions. Additional capabilities like dual redundant power inputs, auto-negotiation, rate limitation, reverse polarity protection, flow and storm control, VLAN data forwarding, and QoS further optimize network performance and enhance security.

DIN Rail Power Supplies

High-End | Three-Phase | Industrial

Maple Systems DIN rail power supplies convert AC line voltage into clean, regulated DC for the PLCs, HMIs, I/O, sensors, relays and valves in your control panel. The range runs from 40W to 960W with 12V, 24V and 48V outputs, on single-phase input (up to 277VAC circuits on High-end models) or 3-phase 320 to 600VAC. Choose High-end Ultra Slim models for 200% peak power, -40°C to +85°C operation and Class I, Division 2 approval, or an Economical family when the job calls for a dependable industrial power supply at a lower cost. Every model is fanless and protected against short circuit, overload and over-voltage.

PID Controllers

Remote Setpoint | Analog Retransmission | Auto-Tuning

Achieve precise, reliable process control with Maple Systems PID Controllers, designed to help industrial manufacturers maintain consistent performance, reduce waste, and improve operational efficiency. Whether you're controlling temperature, pressure, or flow, the right PID controller helps maintain your target setpoint, minimize process variation, and keep your operation running smoothly. The right PID controller parameters keep the system stable, reduce scrap and wasted energy, and prevent costly downtime in industrial processes. Maple Systems PID Controllers combine auto-tuning, fuzzy logic PID control for industrial process and temperature applications.

Accessories

DIN Rail | Terminal Connectors | Cables

Complete your industrial control cabinet build with reliable components engineered for seamless integration and continuous uptime. From DIN-rail and terminal connectors, our curated accessories ensure every connection in your enclosure is secure, organized, and built to withstand harsh manufacturing environments. Whether you are outfitting a new panel or upgrading an existing system, find the dependable hardware you need to keep your operations running smoothly.

Programmable Logic Controller (PLC)

Free Software | Fixed | Expandable

Get your control system up and running in no time with our easy-to-implement PLCs. These controllers provide high-level performance and reliability for industrial automation applications and use our free PLC programming software which utilizes easy-to-use Ladder Logic, Function Blocks, Instruction Lists, or other functions to fit your application. With advanced built-in features such as PID control, high speed counter (HSC), input filtering, and periodic interrupts, these PLCs will work for almost any project. Our Programmable Logic Controllers (PLCs) offer position control, PWM, PID with auto-tuning, High-Speed Counter (HSC), and more features to aid you in your control's solution.





Human Machine Interface (HMIs)

Free Software | Panel Mount | Headless

Monitor operations from a central place, get quick alerts for maintenance, and control machines from anywhere using tablets or smartphones. Our user-friendly HMI Screens and compatibility with IIoT-ready edge devices, makes it simpler to streamline your automation processes. Our free configuration software that lets you customize our HMIs to fit your specific needs. Our HMI software works with over 400 different types of PLCs and controller communication protocols, making it easy to integrate our HMIs into your system, whether it's new or already in use.

HMI + PLC (HMCs)

Free Software | C1D2 | Expandable I/O

Our HMC series combines a touchscreen HMI and PLC all in one unit. Utilized worldwide to employ diverse applications, our HMI+PLCs lower costs, save space, and feature options including: Serial and Ethernet communication, support for Class I Division 2 installations, and numerous I/O configurations. What's more, they provide an affordable combination of display and control in a single package and programmed by using our Free HMI+PLC software MAPware-7000 with graphs, alarms, trending, data logging, web server functionality and more.



Standardizing SCADA Communications with Maple Systems Components

From simple stand-alone machines to sophisticated multi-device networked production lines, Maple Systems solutions empower your facility with enterprise-level operations and IIoT functionalities. Leveraging advanced cloud connectivity, Maple Systems hardware and software assist with:

- Logging data from your devices using Maple Systems, smart HMIs and gateways to aid in reporting, improve efficiency, and reduce downtime.
- Planning routine maintenance with ease by tracking system health metrics directly on Maple Systems HMIs and rugged Tablets.
- Adding advanced IIoT functionality via built-in support for MQTT, OPC UA, native Ignition server integration, and secure SQL databases like MySQL or Microsoft SQL Server.

The right Maple Systems products can help you standardize communications between legacy and modern devices, gluing disparate systems together to create a single, unified source for your SCADA ecosystem. There is no need to completely redesign your entire application. Keep the components that are already working for you, and simply add Maple Systems components to grow your abilities to supervise, control, and acquire data.

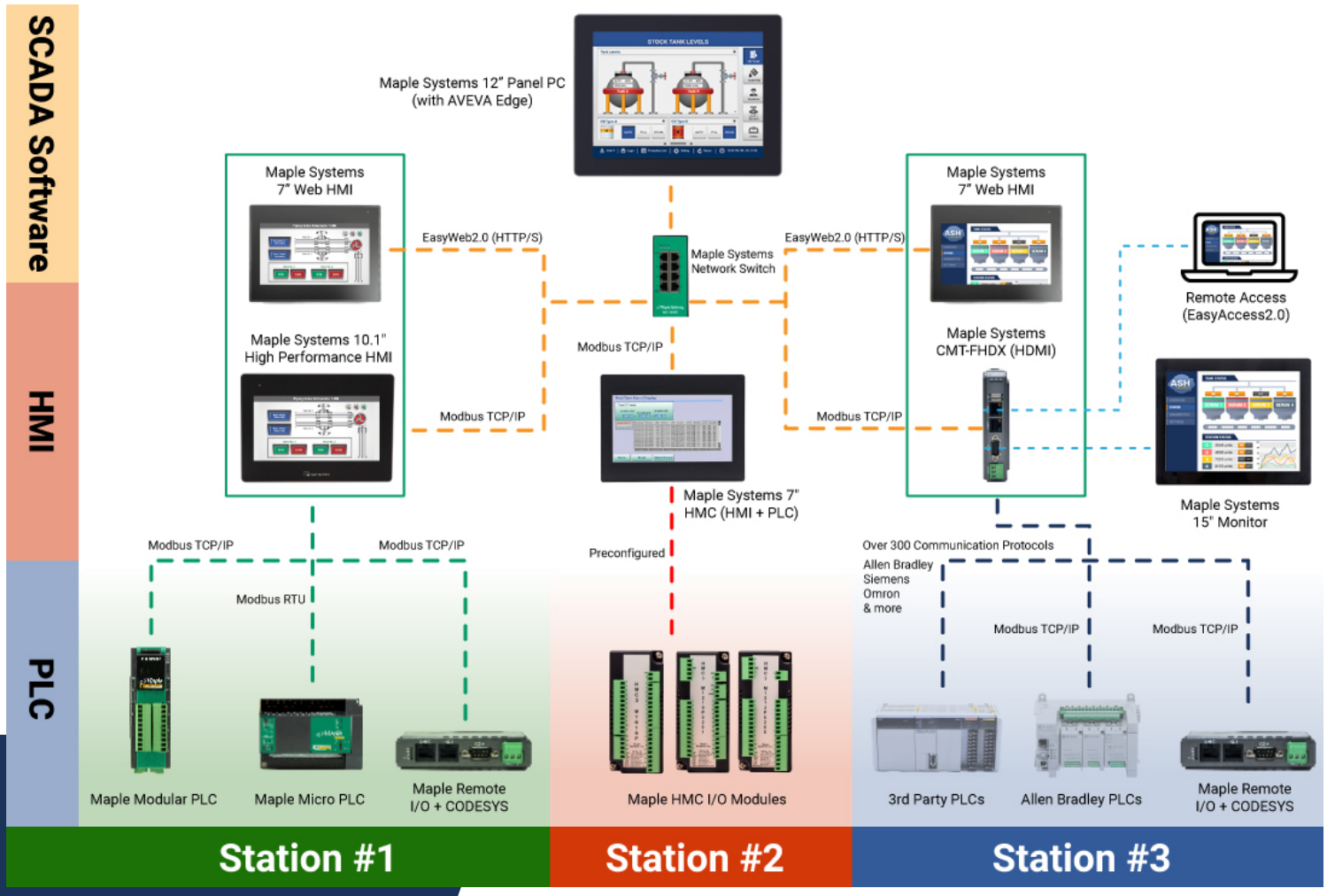

Control Cabinet Essentials

Industrial Automation and Control Solutions

Imagine a system that seamlessly integrates real-time monitoring, intelligent control, and invaluable data analytics that can boost productivity, efficiency, and overall performance. That's the transformative capabilities of Maple Systems products and US-based technical sales and support.



HMIs

IIoT Control for Smart Factories

Our HMIs have enhanced software features such as remote access, data handling, security, recipes, email, and more. IIoT support for MQTT, Sparkplug B, Ignition SQL, and OPC UA. Class 1, Div 2 options available.



PLCs

Modular and Micro Series

Our PLCs provide an affordable combination of function and control in a cost-effective package. Programmed with our FREE control software, MapleLogic, that features high-speed counters, positioning control, input module filtering, PID control, and more, depending on the model.



Industrial PCs

Panel, Box, Rackmount, Media Player

Our Industrial PCs are full-strength, fan-less industrial computers with the power to support your SCADA software. Customize to meet your requirements: CPU, storage, memory, OS, and wifi upgrades available.



HMI + PLCs

Combining HMI and PLC functionality

These HMCs are powerful HMIs with I/O and supports high-speed counters and timers, provides serial, Ethernet communications, and support IEC programming. Class I, Division 2. Remote access options available.



Industrial Monitors

High Brightness, Wide Temp Options

Pair a Capacitive Touchscreen Monitor with one of our Industrial Box PCs or HDMI-enabled HMI to expand your project's capabilities. High brightness (1000nit), Wide-Temp, and Class I Division 2 options available.



Rugged Tablets

Durability, Performance, and Mobility

Built for industrial environments and certified to MIL-STD-810H military standards, these tablets feature waterproof enclosures with Gorilla Glass displays that protect against dust, water, and extreme temperatures.



Network Switches

Industrial Grade Components

Our network switches provide a high level of immunity against EMI and EMS found in industrial environments; and include features such as ESD Protection, Surge Protection, and Short Circuit Protection to ensure continuous operation in unstable power conditions. Unmanaged and managed switches available.



HTML5 Web HMI

Versatile and secure access to any web page

Web HMIs come standard with a built-in Chromium Browser, HTML5 Powered, IP66, Class I, Div 2 rating, ensuring intuitive interaction that enables users to access the same web content across many platforms.



Tower Stack Lights

Flash patterns and buzzer functions

Tower stack lights / Signal Towers provide high-visibility visual and audible signaling for clear machine status indication, safety alerts, and efficient industrial communication.



Pushbuttons

Dependable control for electrical and automation systems

Choose momentary or maintained action with options for illuminated, selector, emergency stop, and toggle designs.



Power Supplies

DIN Rail Mountable

Maple Systems DIN rail power supplies convert AC line voltage into clean, regulated DC for the PLCs, HMIs, I/O, sensors, relays and valves in your control panel.



PID Controllers

Precise, reliable process control

The right PID controller helps maintain your target setpoint, minimize process variation, and keep your operation running smoothly. Our PID Controllers combine auto-tuning, fuzzy logic PID control for industrial process and temperature applications.

Knowledge Base

Guides, tutorials, and documentation

Technical guides and how-to articles for Maple Systems products. Resources and configuration guides including programming basics, setup, communication protocols, software deployment, networking, and so much more!

Schedule a call with one of our product specialists today

Maple Systems, Inc. | 808 134th St SW, suite 120, Everett, WA 98204 | 425.745.3229 | maplesystems.com